Haier

User Manual

battery energy storage system

HLR-1X5K

HLR-1X10K

HLR-1X15K

HLR-1X20K

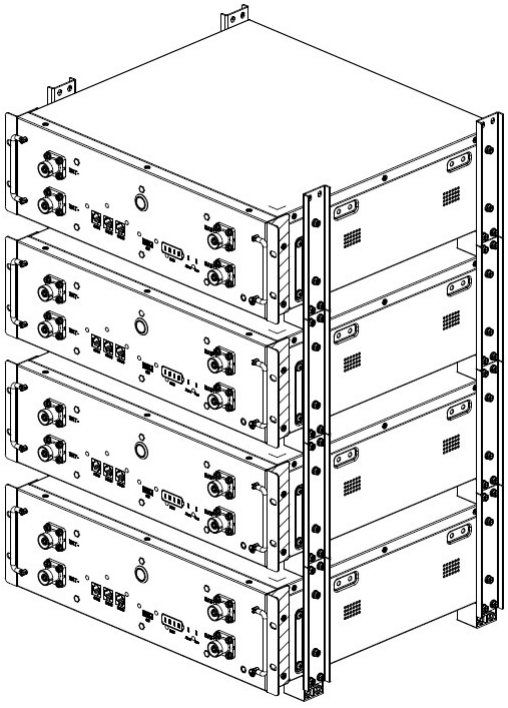

Version：V1.1

Content

1 Safety precaution. 1
1.1 Storage and installation environment 1
1.2 Battery safety guidelines 1
1.3 Warning signs and stickers 1
1.4 Emergency handling 2
1 Product Description. 3
1.1 Product Introduction 3
1.2 Product appearance description. 4
2 Installation Guide 5
2.1 Installation site requirements 5
2.1.1 Environmental requirements 5
2.1.2 Physical installation requirements. 6
2.1.3 Preparation of installation tools. 7
2.1.4 Unboxing guide. 7
2.2 Installation steps 8
2.2.1 Installation step 8
3 Electrical connection. 11
3.1 Grounding 11
3.1.1 Connector installation 12
3.1.2 Guide of electrical connection. 14
4 System commissioning 20
4.1 System power on. 20
4.2 System power off 21
4.3 System configuration 21
5 Maintenance and troubleshooting 24
5.1 Routine maintenance. 24
5.2 Fault checklist 24
6 Warehouse storage guidelines 25
6.1 Packaging guidelines. 25
6.2 Storage 26
7 Dispose of used batteries. 26
8 Detailed parameter 27

1 Safety precaution

Read the manual carefully and operate in accordance with the safety precautions. Refer to local safety regulations on items not covered in this manual. Electrical installation, maintenance must be performed by professional / qualified personnel.

1.1 Storage and installation environment

- Handle the product gently, prevent from dropping
- Avoid open flame; keep away from flammables, explosives or corrosive chemicals
- Choose cool and dry place for storage and installation
- Prevent from water or humid intrusion
- Prevent from accidental access (children and animals)
- Do not step on the product packaging
- Do not place any foreign objects on top of the battery pack
- Do not store the battery pack upside down

1.2 Battery safety guidelines

- Prevent from electrostatic discharge
- Wear insulating gloves when handling batteries.
- Do not energize auxiliary power during installation
- Check the polarity carefully before switching on the system
- Defected or damaged batteries shall not be charged or discharged

Use the product only with inverters authorized by Nahui, or consult Nahui's product engineers. For compatible list inverters, please visit: https://www.nahui-newenergy.com/

1.3 Warning signs and stickers

	Warning generic hazard		DO not mix with domestic
	Warning High Voltage - Electrical shock hazard		Please recycle
	No flame		This side up
	No stepping on		User manual
	Warning High temperature		Protective Earth (connector)

	Warning High Voltage Wait 5 min till fully discharged		Protective Earth (general identification)
	Do not short circuit (cut off power)		Keep away from children
	Fragile		Do not get wet

1.4 Emergency handling

Wear personal protective equipment (PPE) such as goggle, facemask, insulated gloves and boots. Evaluate the situation before taking remedy action. When it is safe to do so, disconnect external AC or DC power connection.

Damaged or deformed battery enclosure
Risk of chemical leakage (i.e. electrolyte) and internal short-circuit.

 Warning

Deformed or severely damaged battery pack can lead to piercing of cell pouch (chemical leakage) or internal short-circuit (thermal runaway). The damaged battery pack can release toxic gas. Keep away from it.
In case of accidental skin contact, wash the skin thoroughly with soap and seek medical advice. For eye contact, wash under running water (~15 minutes) and require immediate medical attention.

Fire hazard
If the fire is not from the battery or not spread to the battery, use FM-200 or CO_2 fire extinguisher to put out the fire.
If the battery pack catches fire, do not attempt to put out the fire and evacuate immediately.
Seek medical in case of inhalation of pungent and toxic fumes.

Keep damaged batteries isolated and call your local fire department. Contact service for further support.

Note：
1. If a fire occurs during battery charging, disconnect the battery pack circuit breaker and cut off the power supply for charging under safe conditions.
2. If the battery string does not catch fire, extinguish the fire before the battery string catches fire.
3. If the battery pack catches fire, do not attempt to extinguish the fire. Evacuate immediately.

Water damage
Risk of electric shock and internal short-circuit. In case of splash or water spillage, when it is safe to do so, dry the product. If any part of the battery system is submerged, keep away from water.

Do not reuse the submerged battery. Contact a service for support.

1 Product Description

This document mainly introduces the product, installation, commissioning, maintenance, troubleshooting, packaging, and transportation of the HLR-1X5K/10K/15K/20K battery energy storage system.

1.1 Product Introduction

• This product is a lithium battery energy storage system based on the chemical composition of Lithium Iron Phosphate (LFP), and adopts a module parallel design.
• A single system consists of a data display box (optional) and multiple battery modules, and supports up to 4 battery modules in parallel.
• The battery energy storage system can be used with the inverter, and the communication adopts CAN or RS485.
• The system supports up to 2 single systems connected in parallel, which can be expanded to 40kWh.
• The battery management system provides data collection, status monitoring and control to ensure safe and reliable operation of the system.
• The system adopts IP20 protection design to support indoor use.

System Diagram

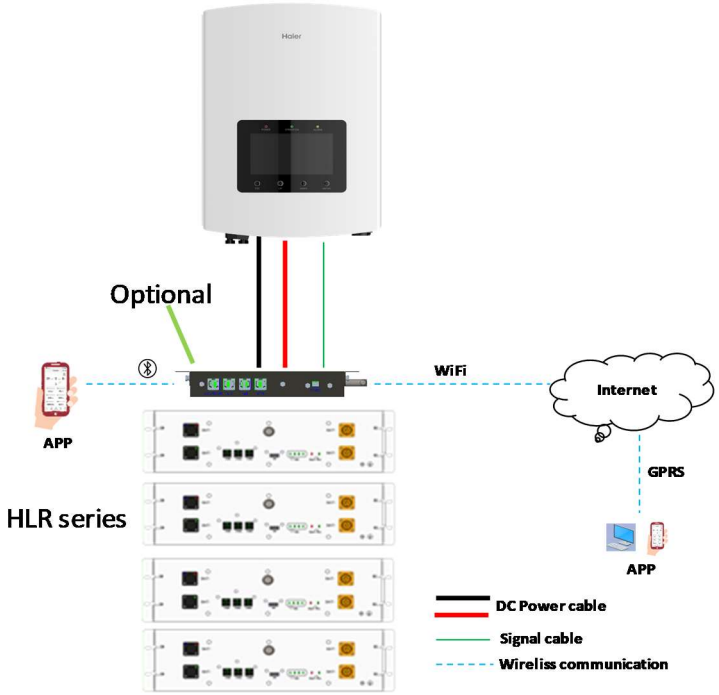

Note: Communication resistor is mainly used for signal anti-interference in the communication loop, is an optional accessory, if the communication is unstable, you can increase the optional 120Ω termination resistance.

1.2 Product appearance description

Product size chart:

The battery module size diagram and effect diagram are shown in the following figure:

Size: W*D*H=443*410*135 mm

Weight: 45kg

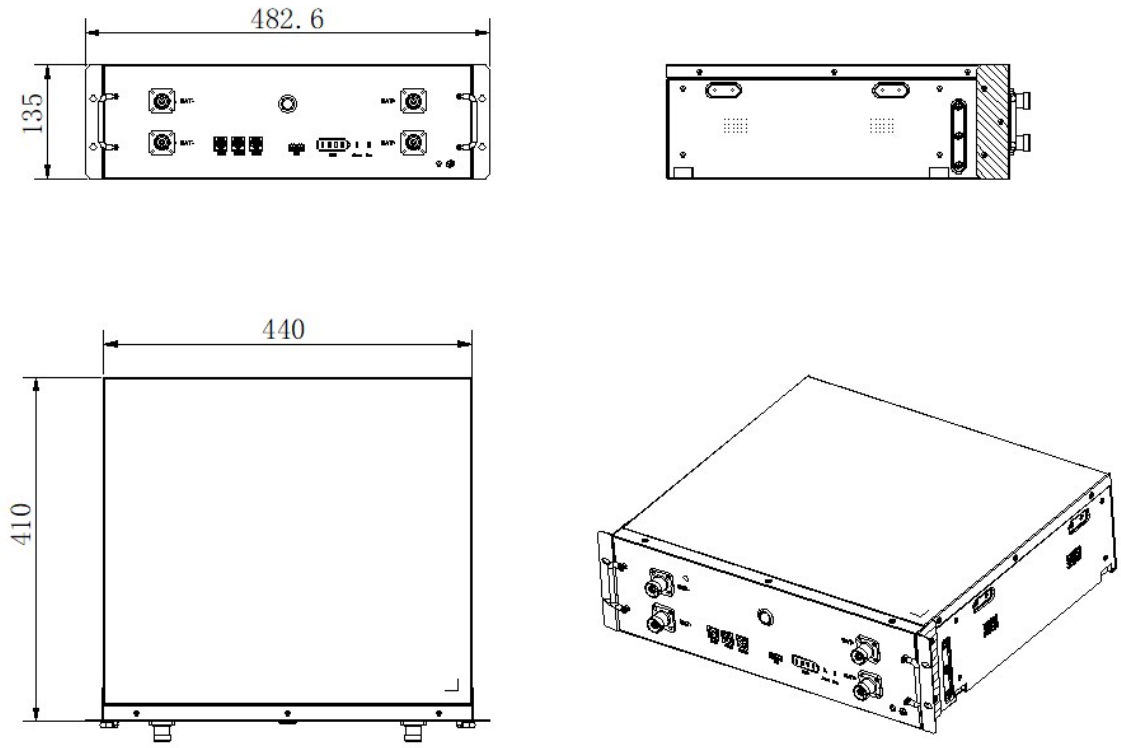

Figure 4.3 Dimensions of module

Product Front Panel Definition：

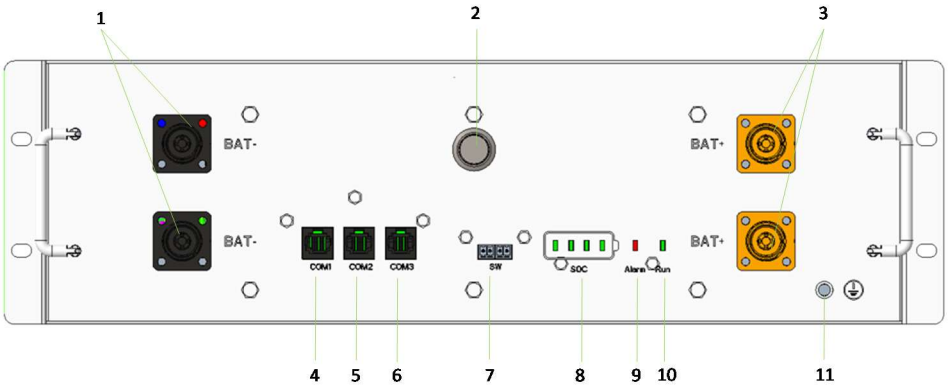

Item	Name	Description	Remark
1	BAT-	Battery output negative port	
2	POWER	Battery module switch button	
3	BAT+	Battery output positive port	
4	COM1	Communication interface with PCS	RS485&CAN
5	COM2	Automatic addressing and internal CAN communication interface	
6	COM3	Automatic addressing and internal CAN communication interface	
7	SW	Power button	
8	SOC	Battery module SOC indicator LED light	
9	Alarm	Error LED Light	
10	Run	Running LED light	
11	PE	ground hole	

2 Installation Guide

2.1 Installation site requirements

2.1.1 Environmental requirements

a. Ambient temperature: -10℃～+50℃ (recommended: 10℃～35℃ or 50℉～95℉).

b. Ambient humidity: 10-95%.

c. Altitude <= 2000 meters.

d. For indoor installation

- Avoid direct sunlight
- Avoid rain and snow
- Avoid flood-prone locations
- Install under shed if possible

• 3 feet of clearance from doors, windows, driveways, or other batteries

• Keep away from heating equipment.

• Protection against corrosive chemicals

• Prevent water from spilling

e. Consider locations with ventilation fans, smoke, heat or combustible gas detectors.

Warning!

Use of HLR series product outside of the temperature range may cause irreversible damage to it

Note: If HLR series product is used below 10 ℃ or above 40 ℃, the charging and discharging current of HLR series product may decrease.

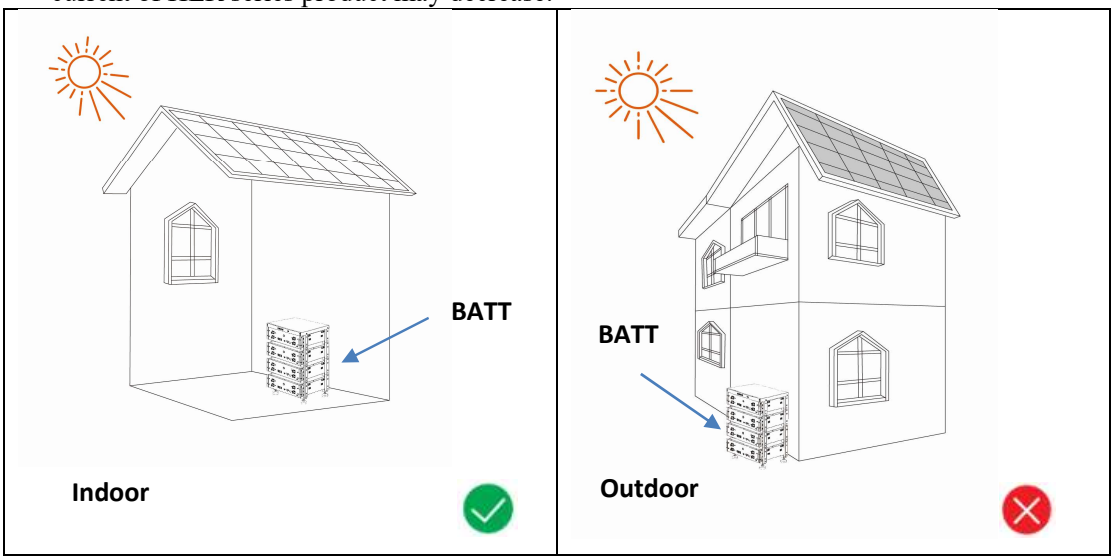

2.1.2 Physical installation requirements

This simple bracket is optional. Assuming that the client has a cabinet or bracket designed to meet the standard 19inch and 3U height installation, it is not necessary to choose this suggestion and ignore the following installation methods.

a. Product installation dimensions

HLR-1X5K：

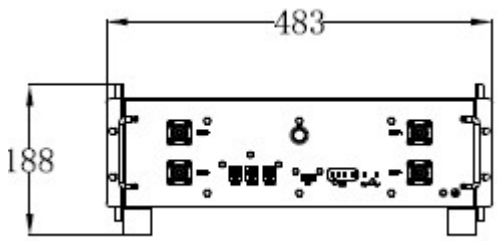

HLR-1X10K：

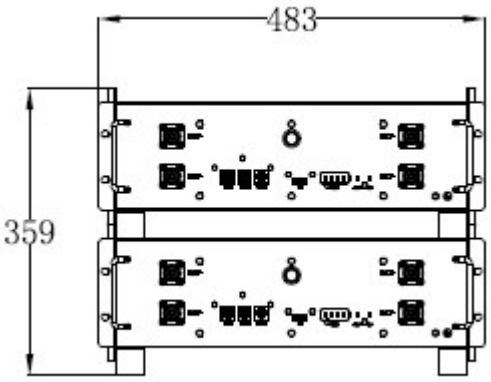

HLR-1X15K：

HLR-1X20K：

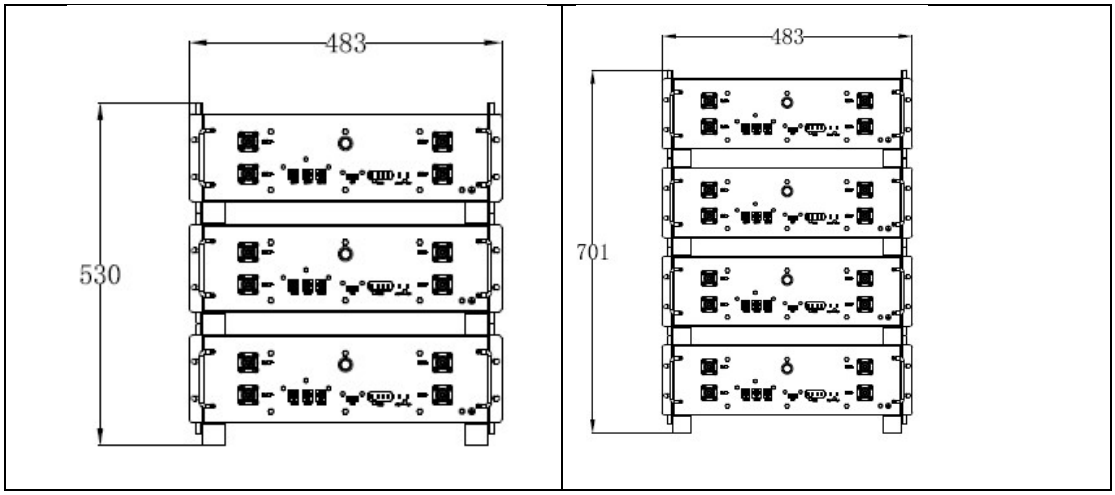

b. Weight

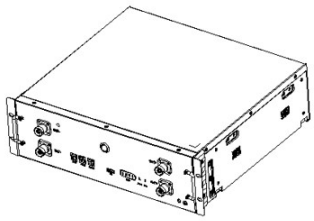



⚠45kg (99.2lbs)

For 2 persons

2.1.3 Preparation of installation tools

Tools			
 Electric screwdriver (M5 sleeve)	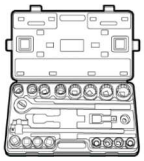 Wrench		

Personal Protective Equipment			
 Safety gloves	safety shoes 		

2.1.4 Unboxing guide

Unpacking checklist

Components

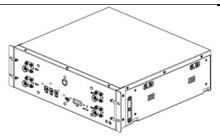 Battery	 Data display box （Optional accessory）	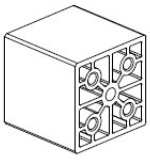 Feet	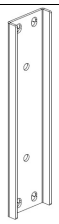 Racks	 M5*10 screw
 M6*14 ground				

Wiring Harness kit Packaging Components Between Battery module			
 Positive wire harness X1	 Negative wire harness X1	 PCS-RS485/CAN communication cable X1	 Power on cable X1

System wiring harness kit Packaging Components		
 Positive wire harness X1	 Negative wire harness X1	 PCS-RS485/CAN communication cable X1

2.2 Installation steps

2.2.1 Installation step

1）Feet racket installation

Take out the 4PCS feet and rackets to install.

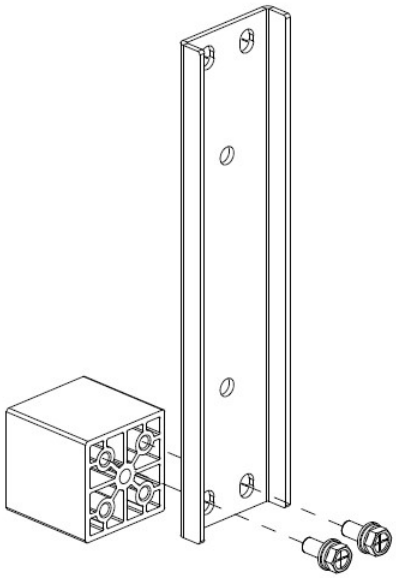

2) Easy racket installation

Install simple rackets on both sides of the battery module (including simple rackets with feet)

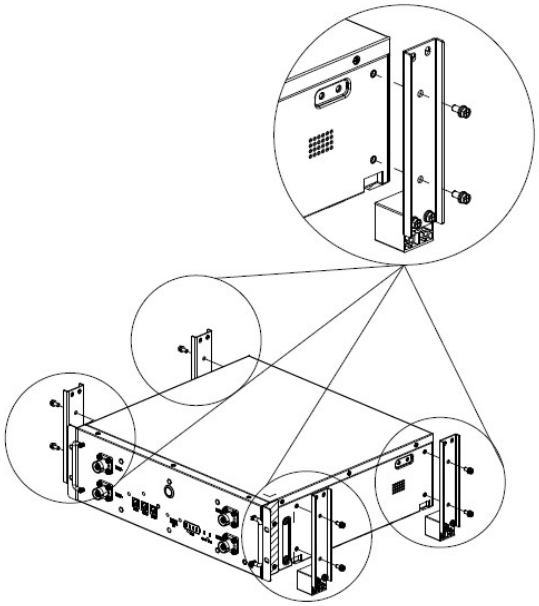

3) Battery module installation

a. Lay the battery module with simple racket (including feet) on the horizontal floor (Adjust feet to make the battery module horizontal if the floor is not flat).
b. Install other battery modules with simple racket one by one. Fix the structure with M5*10 screw after the stack-up.

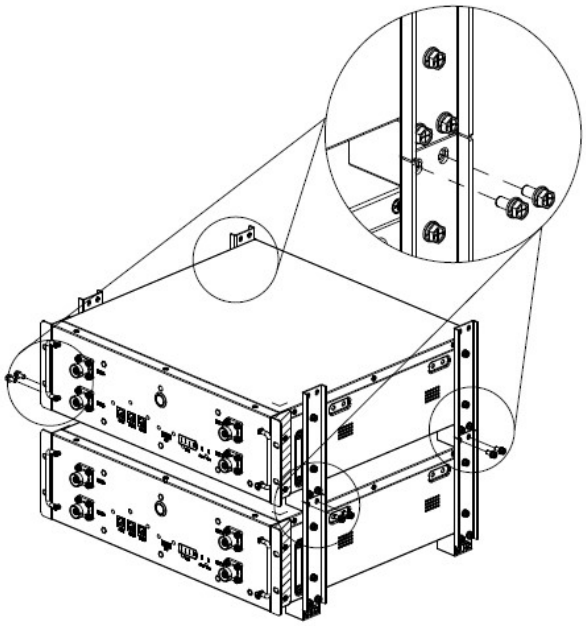

c. A maximum of four battery module are stacked based on the system capacity.

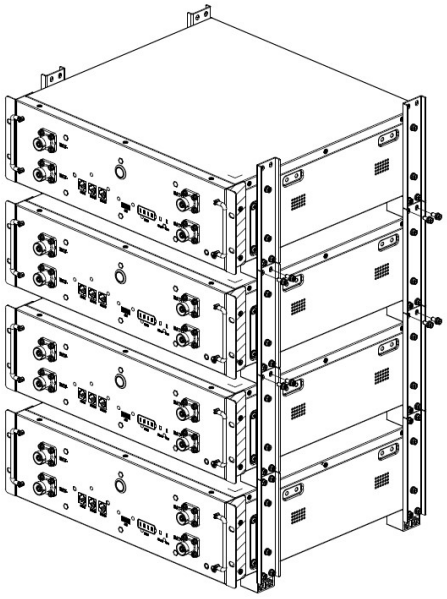

4) Data display box installation (Optional)

◆ Function and operation introduction of data display box:

1) Display control of LCD screen or segment code screen
2) Communication between battery and PCS
3) Remote operation, parameter set, software update
4) Compatible with multi series of rack type of product
5) Optional based on requirement of customer and system

◆ Dimension and appearance of data display box

Dimension: Width*Depth*Height=250*200*35 mm

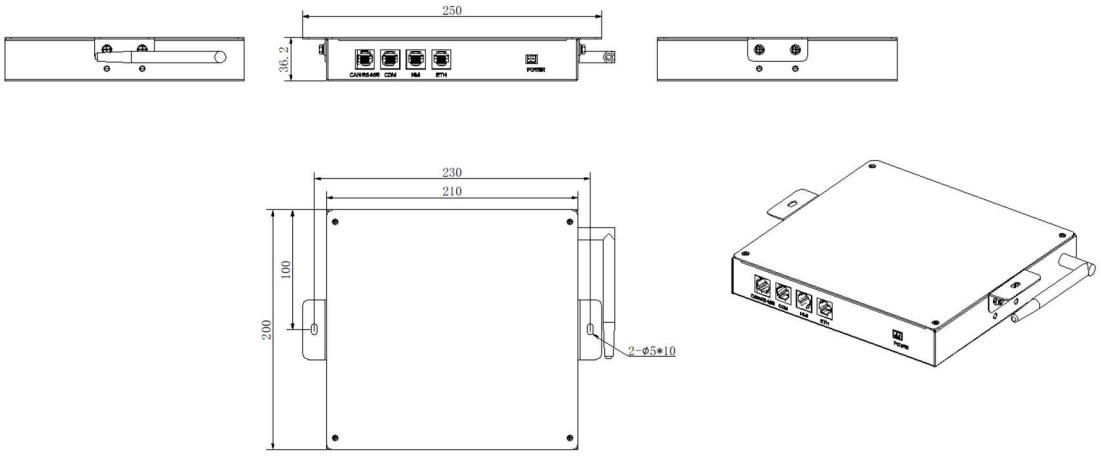

Figure 4.5 Dimension of data display box

◆ Installation step

Take the rain cover and data display box, and as shown in the picture, paste a fixed data display box on the top battery pack (with glue on the bottom).

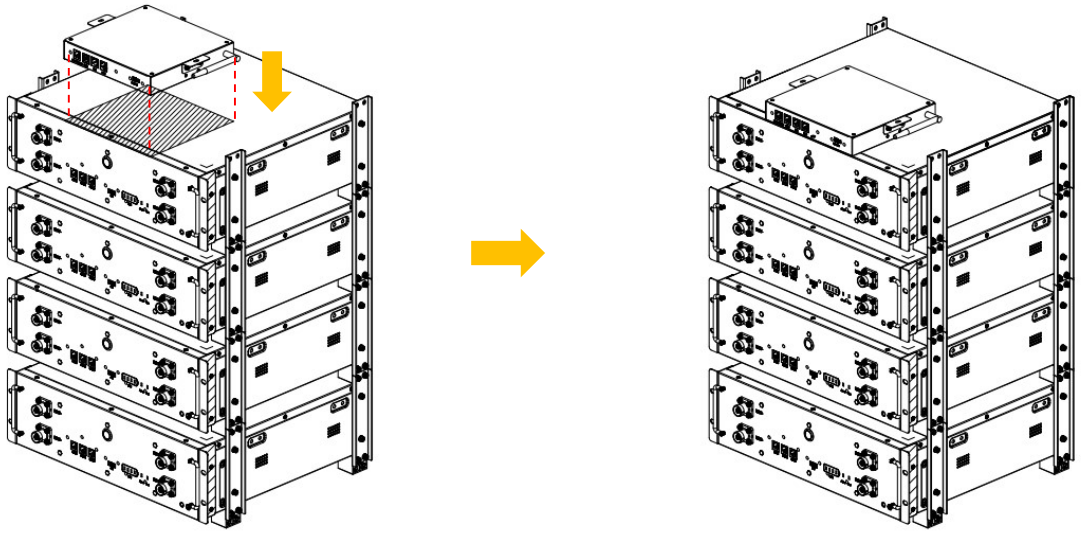

Note: Neglect this step if data display box not bought

3 Electrical connection

3.1 Grounding

Grounding point

Introduce the product ground point to the nearby ground point

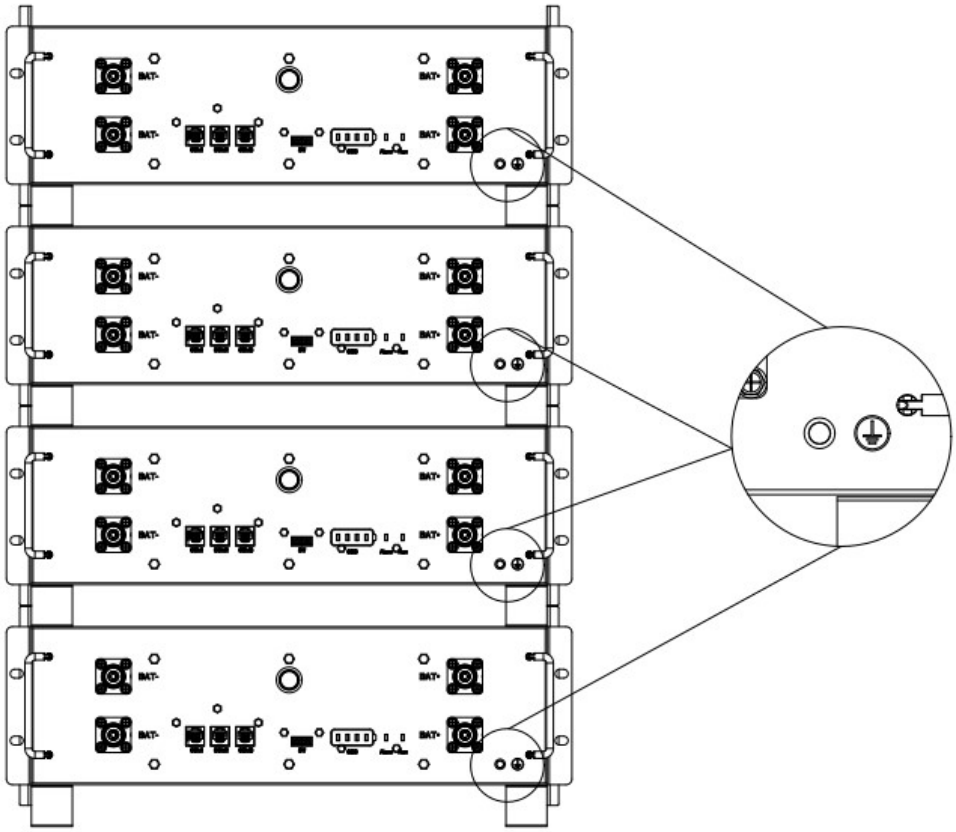

3.1.1 Connector installation

Schematic diagram of power wiring

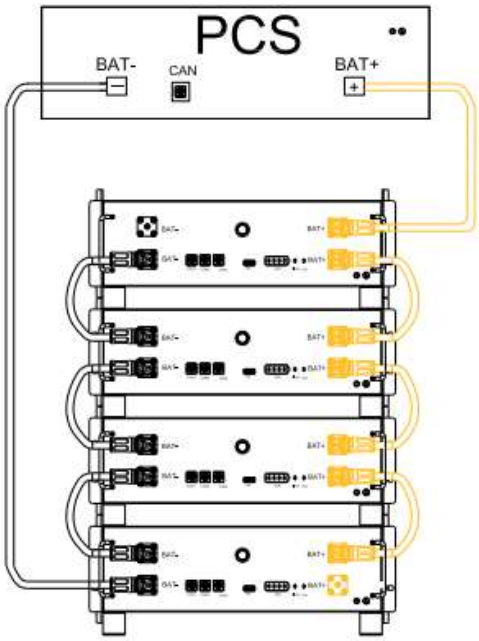

Connector installation instructions

The power cable connection is shown in the figure, press and hold the red unlock button, and there is a clicking sound for the plug connection.

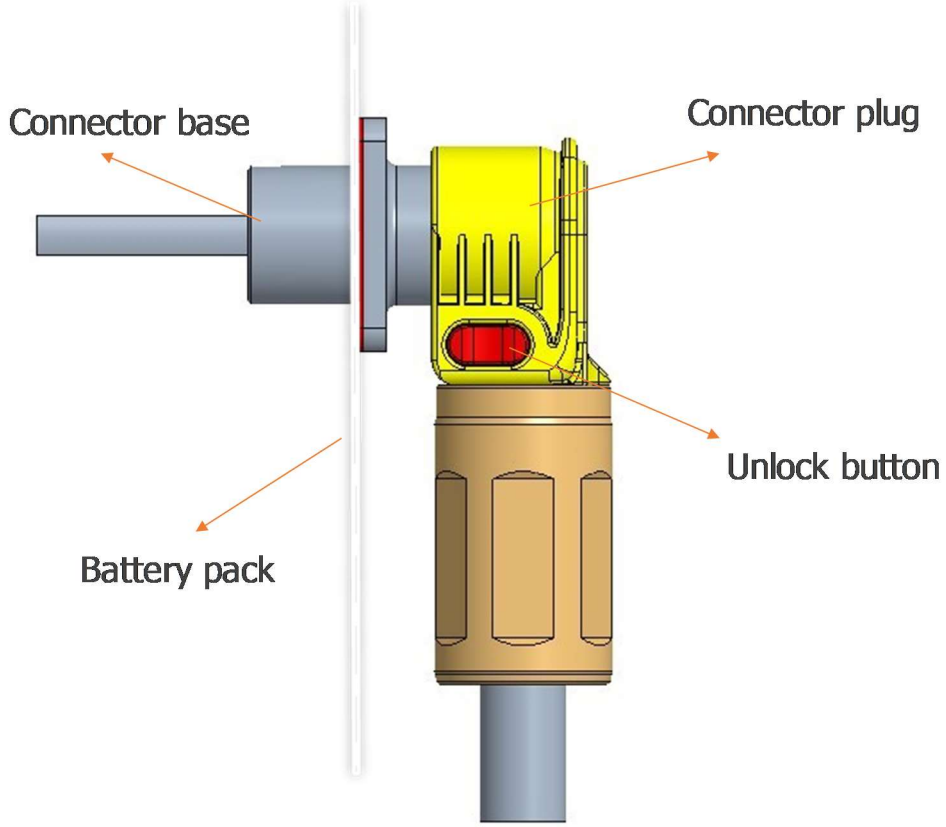

3.1.2 Guide of electrical connection

Electrical connection for single module shown as follows, PCS: 51.2V input

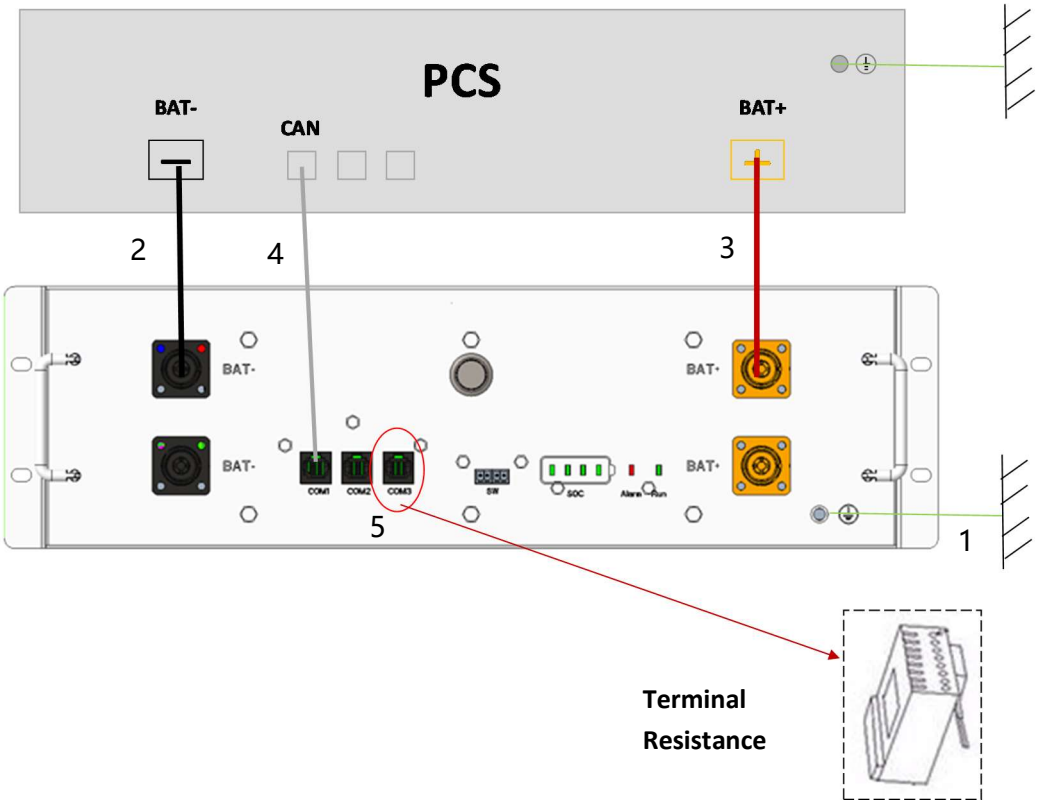

No.	Electrical connection	Wire specifications	Mark
1	Battery module grounding	Non	With grounding terminal
2	Connect the battery negative with PCS negative, typical color BLACK	1/0 AWG,2000mm	PCS- to BAT-
3	Connect the battery positive with PCS positive, typical color ORANGE	1/0 AWG,2000mm	PCS+ to BAT+
4	Connect the battery with PCS-CAN, typical color GRAY	8P8C Type 5 Shielded network cable	BAT-CAN to PCS-CAN
5	Terminal Resistance	120Ω	Optional

One cluster of parallel connection shown as follows, PCS: 51.2V input

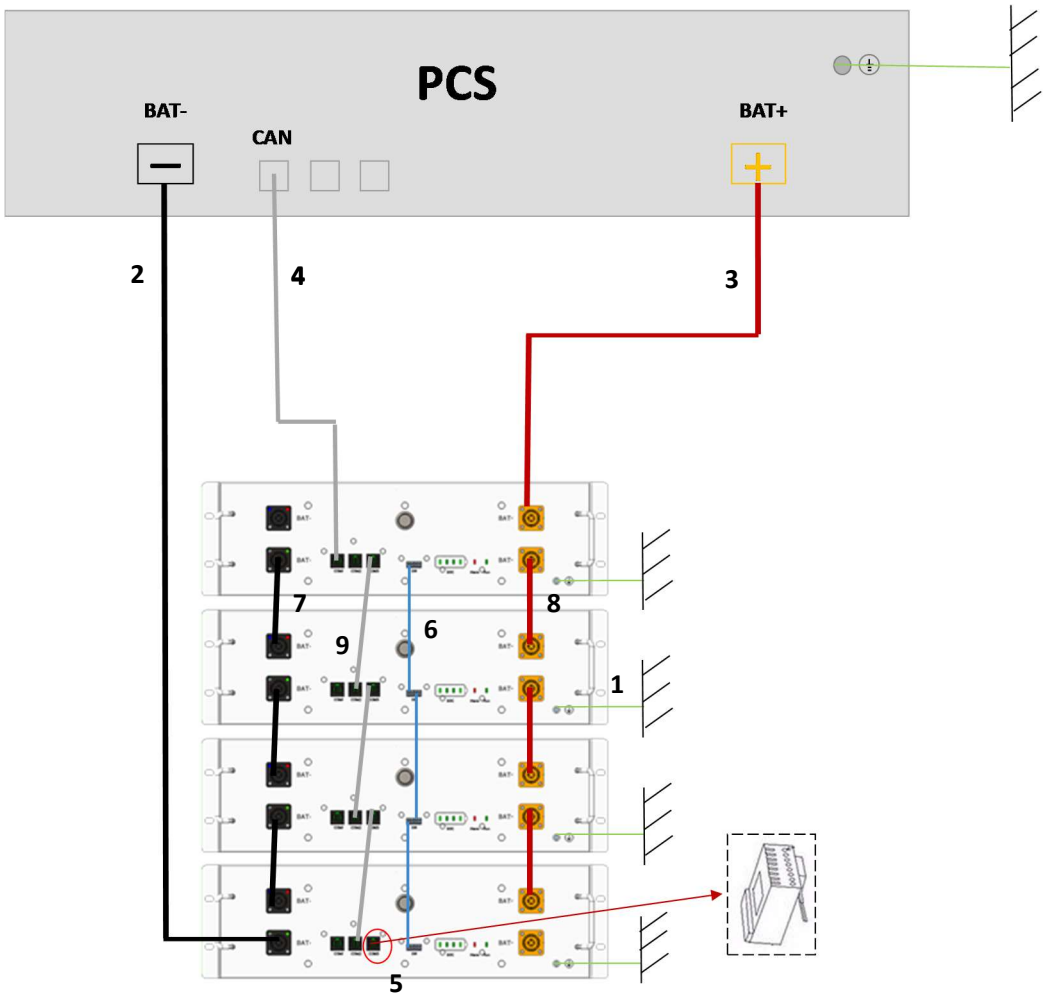

No.	Electrical connection	Wire specifications	Mark
1	Battery module grounding	Non	With grounding terminal
2	Connect the battery negative with PCS negative, typical color BLACK	1/0 AWG,2000mm	PCS- to BAT-
3	Connect the battery positive with PCS positive, typical color ORANGE	1/0 AWG,2000mm	PCS+ to BAT+
4	Connect the battery with PCS-CAN, typical color GRAY	8P8C Type 5 Shielded network cable,2000mm	BAT-CAN to PCS-CAN
5	Terminal Resistance	120Ω	Optional
6	Connection with one-button power on function, paired connection	Power on cable,250mm	/

7	Negative wiring between battery modules, typical color BLACK	1/0 AWG,320mm	BAT- to BAT-
8	Positive wiring between battery modules, typical color ORANGE	1/0 AWG,320mm	BAT+ to BAT+
9	Connect the battery with BAT-CAN, typical color GRAY	8P8C Type 5 Shielded network cable,220mm	BAT-CAN to BAT-CAN

One cluster of parallel connection with data display box shown as follows (Optional for data display box), PCS: 51.2V input

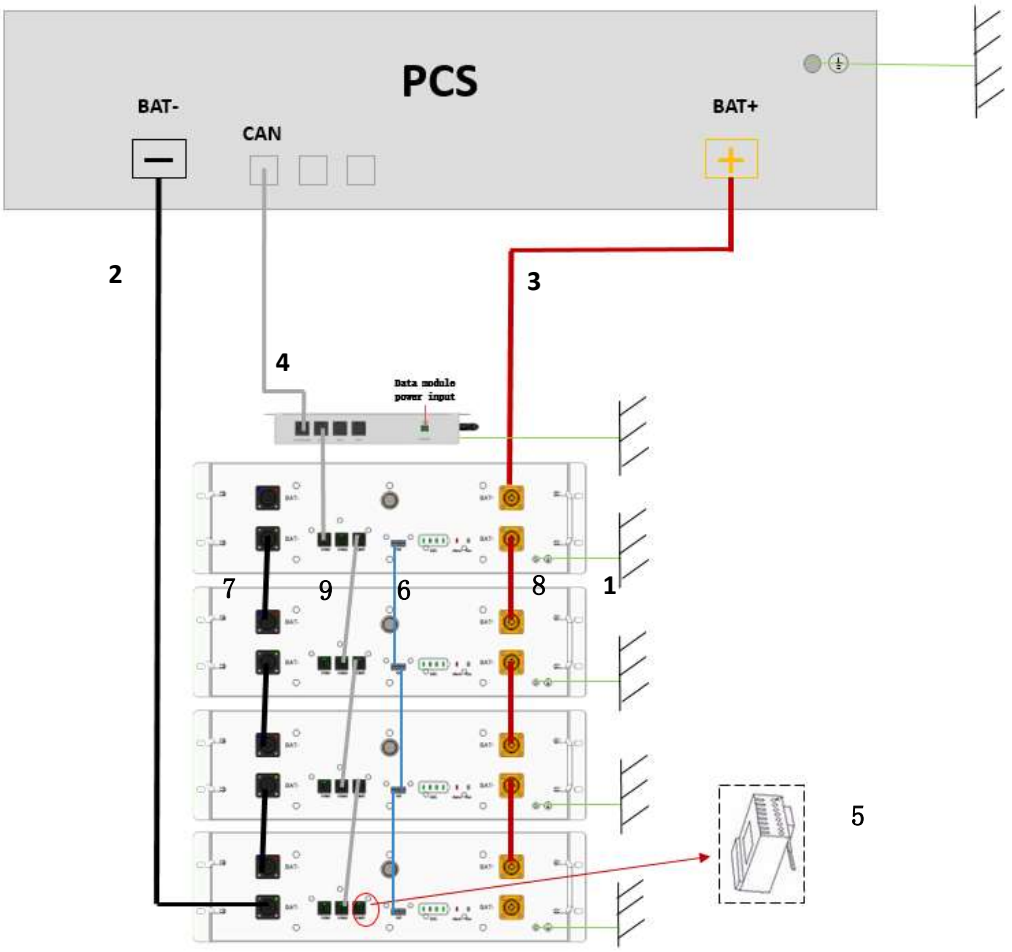

No.	Electrical connection	Wire specifications	Mark
1	Battery module grounding	Non	With grounding terminal
2	Connect the battery negative with PCS negative, typical color BLACK	1/0 AWG,2000mm	PCS- to BAT-

3	Connect the battery positive with PCS positive, typical color ORANGE	1/0 AWG,2000mm	PCS+ to BAT+
4	Connect the display box with PCS-CAN, typical color GRAY	8P8C Type 5 Shielded network cable,2000mm	BAT-CAN to PCS-CAN (Display box)
5	Terminal Resistance	120Ω	Optional
6	Connection with one-button power on function, paired connection	Power on cable,250mm	/
7	Negative wiring between battery modules, typical color BLACK	1/0 AWG,320mm	BAT- to BAT-
8	Positive wiring between battery modules, typical color ORANGE	1/0 AWG,320mm	BAT+ to BAT+
9	Connect the battery with BAT-CAN, typical color GRAY	8P8C Type 5 Shielded network cable,220mm	BAT-CAN to BAT-CAN

Two clusters of parallel connection shown as follows, PCS: 51.2V input

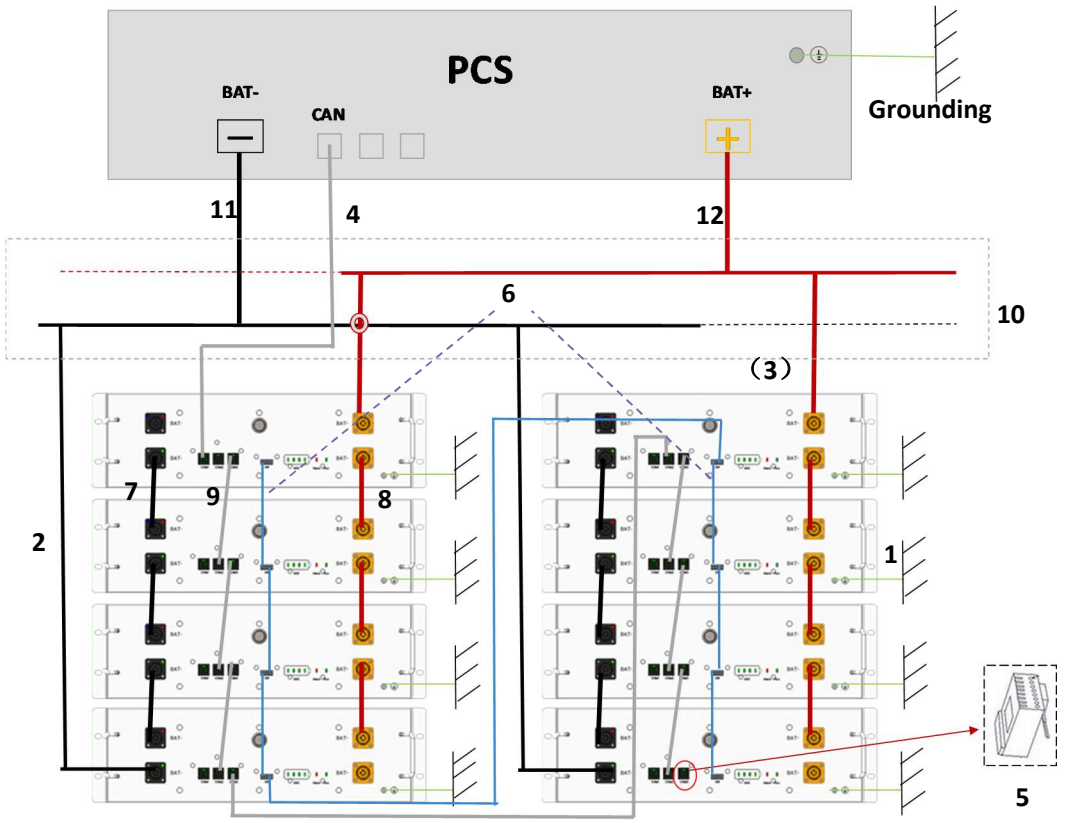

No.	Electrical connection	Wire specifications	Mark
1	Battery module grounding	Non	With grounding terminal

2	Connect the battery negative with combiner box negative bus-bar, typical color BLACK	1/0 AWG,2000mm	Bar-bus- to BAT-
3	Connect the battery positive with combiner box positive bus-bar, typical color ORANGE	1/0 AWG,2000mm	PCS+ to BAT+
4	Connect the battery with PCS-CAN, typical color GRAY	8P8C Type 5 Shielded network cable,220mm	BAT-CAN to BAT-CAN
5	Terminal Resistance	120Ω	Optional
6	Connection with one-button power on function, paired connection	Power on cable,250mm	/
7	Negative wiring between battery modules, typical color BLACK	1/0 AWG,320mm	BAT- to BAT-
8	Positive wiring between battery modules, typical color ORANGE	1/0 AWG,320mm	BAT+ to BAT+
9	Connect the battery with BAT-CAN, typical color GRAY	8P8C Type 5 Shielded network cable,220mm	BAT-CAN to BAT-CAN
10	Combiner box	/	
11	Connect the combiner box with PCS negative, typical color BLACK	1/0 AWG,2000mm	BAT- to BAT-
12	Connect the combiner box with PCS positive, typical color ORANGE	1/0 AWG,2000mm	BAT+ to BAT+

Two clusters of parallel connection with data display box shown as follows, (Optional for data display box), PCS: 51.2V input

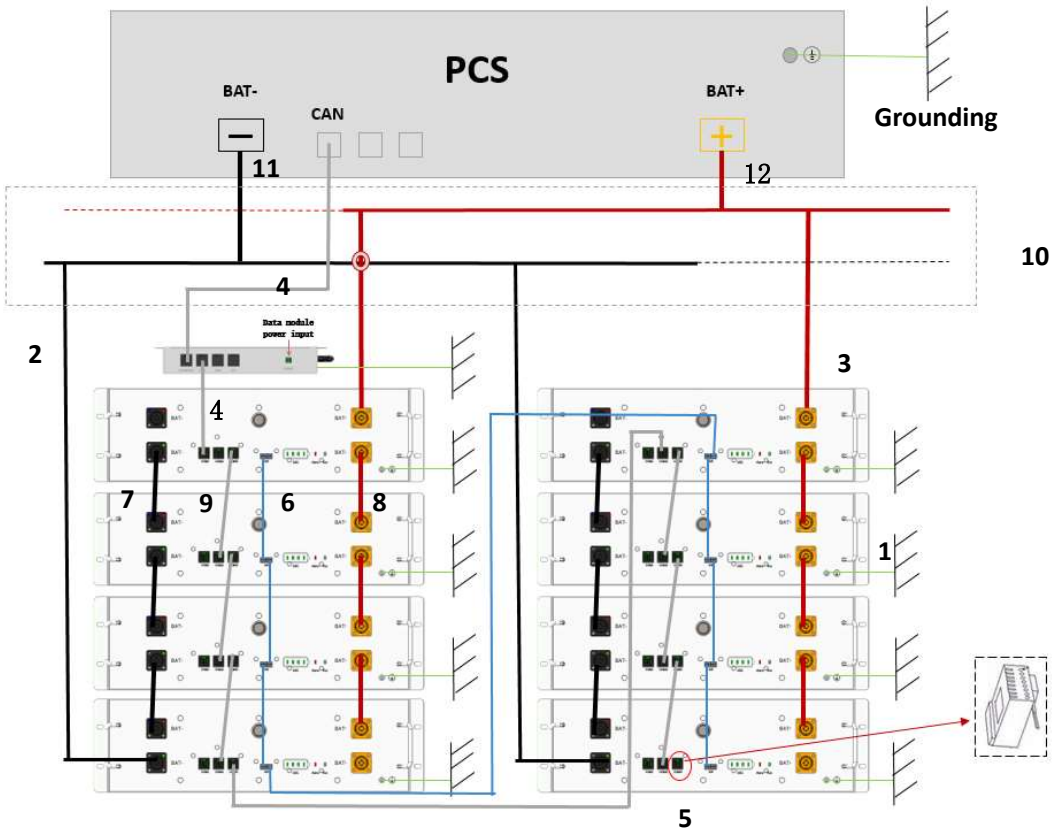

No.	Electrical connection	Wire specifications	Mark
1	Battery module grounding	Non	With grounding terminal
2	Connect the battery negative with combiner box negative bus-bar, typical color BLACK	1/0 AWG,2000mm	Bar-bus- to BAT-
3	Connect the battery positive with combiner box positive bus-bar, typical color ORANGE	1/0 AWG,2000mm	PCS+ to BAT+
4	Connect display box with PCS-CAN, typical color GRAY	8P8C Type 5 Shielded network cable,2000mm	TBOX-CAN to PCS-CAN
5	Terminal Resistance	120Ω	Optional
6	Connection with one-button power on function, paired connection	Power on cable,250mm	/
7	Negative wiring between battery modules, typical color BLACK	1/0 AWG,320mm	BAT- to BAT-
8	Positive wiring between battery modules, typical color ORANGE	1/0 AWG,320mm	BAT+ to BAT+

9	Connect the battery with BAT-CAN, typical color GRAY	8P8C Type 5 Shielded network cable,220mm	BAT-CAN to BAT-CAN
10	Combiner box	/	
11	Connect the combiner box with PCS negative, typical color BLACK	1/0 AWG,2000mm	BAT- to BAT-
12	Connect the combiner box with PCS positive, typical color RED	1/0 AWG,2000mm	BAT+ to BAT+
13	Connect the battery module with display box, typical color GRAY	8P8C Type 5 Shielded network cable	TBOX-CAN to BAT-CAN

4 System commissioning

All cables shall be connected properly

4.1 System power on

① Switch on the inverter (if inverter has the switch button)
② Press POWER button for more than 3s, the system start up and have output voltage, screen and POWER button is light up.

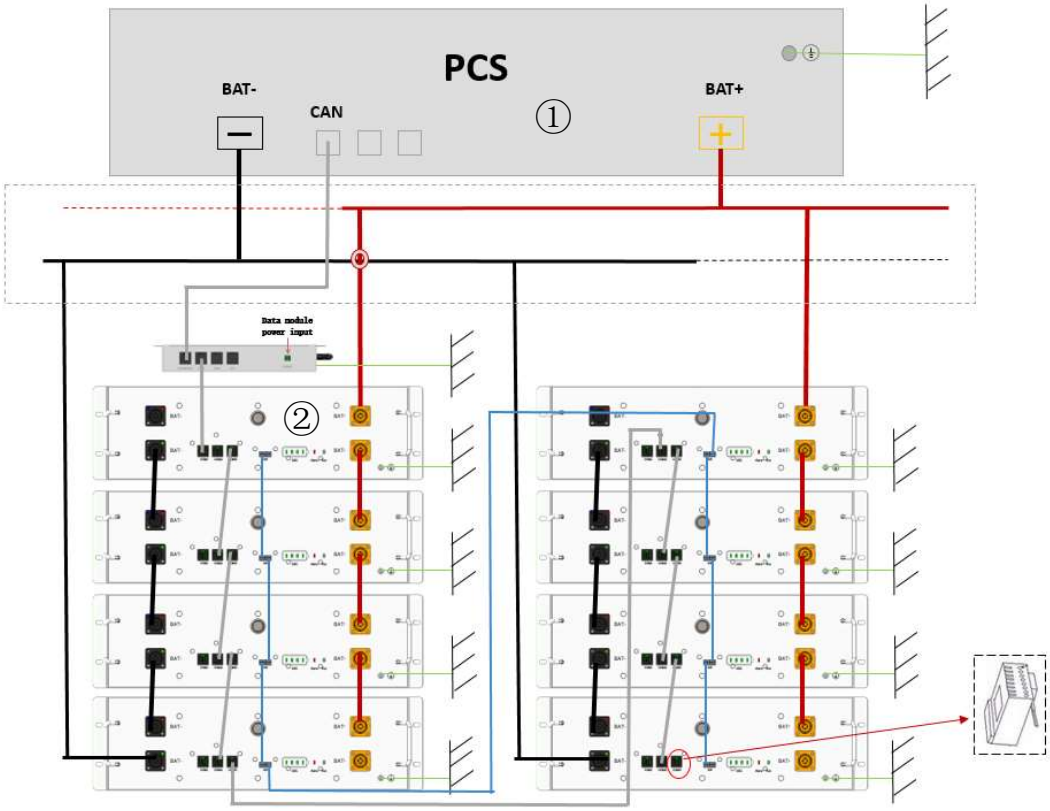

4.2 System power off

① Switch off the inverter (if inverter has the switch button)
② Press POWER button for more than 3s, the system is closed, screen and POWER button go out.

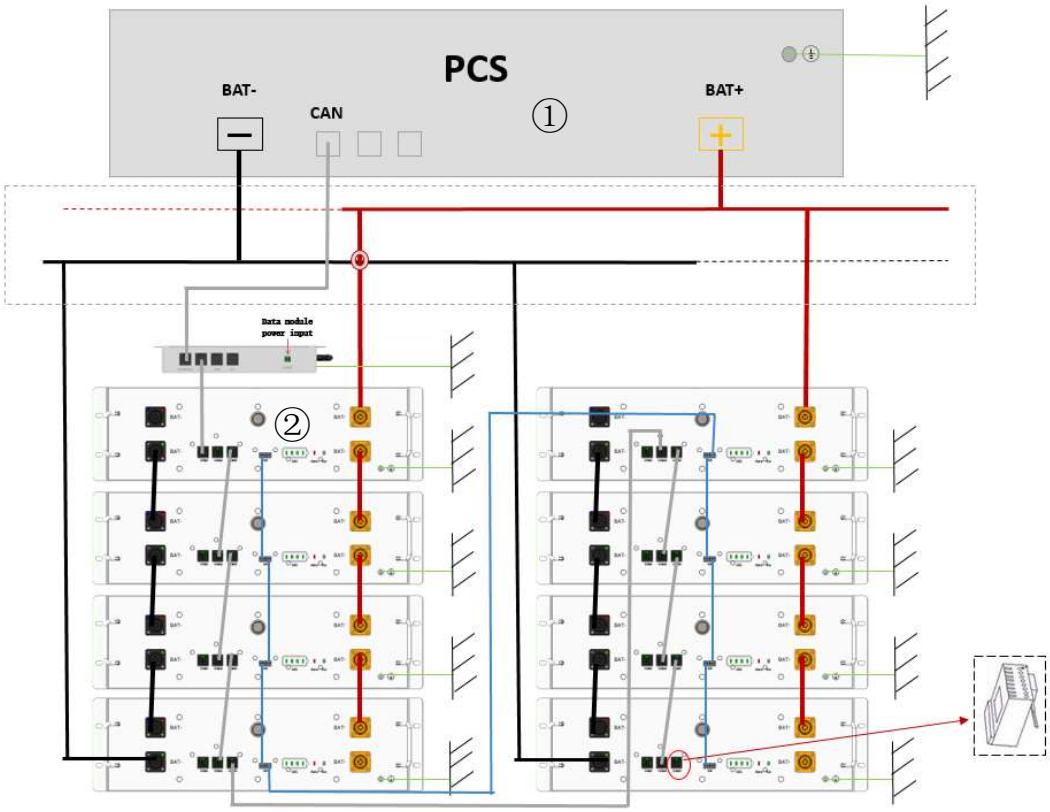

4.3 System configuration

a. Download and install PowerLite APP

The battery parameter setting and remote monitoring can be realized through the APP software (PowerLite), please go to the App Store or Google Play to search for "PowerLite" to download and install.

b. Network configuration

1) Turn on the Wi-Fi and Bluetooth signal on your phone

2) Click Register to go to register an account

Enter the registration interface and fill in the information, after receiving the verification by email, enter the verification code to complete the registration.

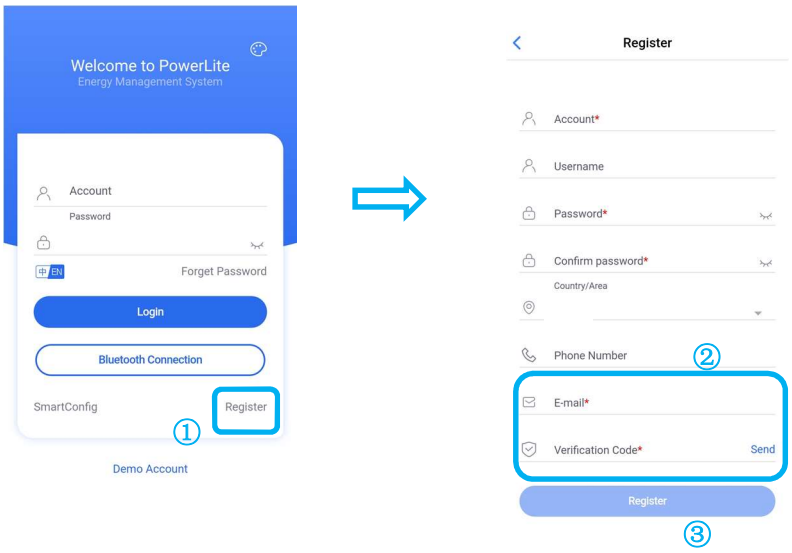

Note: If you have already registered a login account, please ignore this step.

3) Configure the network

(You can check the Bluetooth SN code of the battery device at the antenna position of the control module)

①Click "SmartConfig", ②Select the Bluetooth device corresponding to the battery, ③Enter the WiFi network account and WiFi password, ④Click "SmartConfig" to complete the networking,the APP displays the successful network configuration information and the WiFi icon on the display is always on, that is, the network configuration is completed.

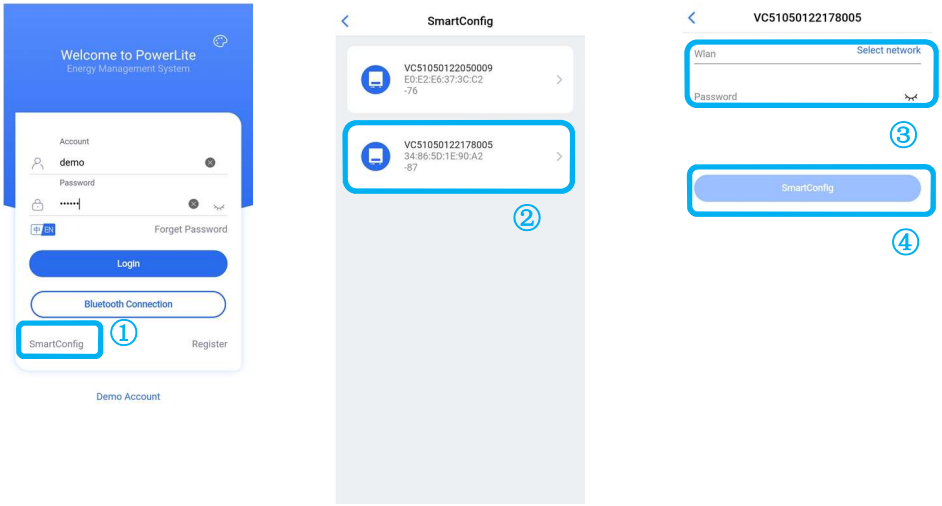

c. Add site/device

(Please check the battery equipment SN on the control box)

Enter the account, password and verification code, ①Click "Login" to log in. ②After logging in, click on the top right corner of the main interface to add a site, ③After recommending a power station, then add equipment, ④ select the SN code on the nameplate of the control module to add, ⑤And simultaneously click "Assigned Plant" to bind the battery equipment to the established power station , complete the site/device addition.

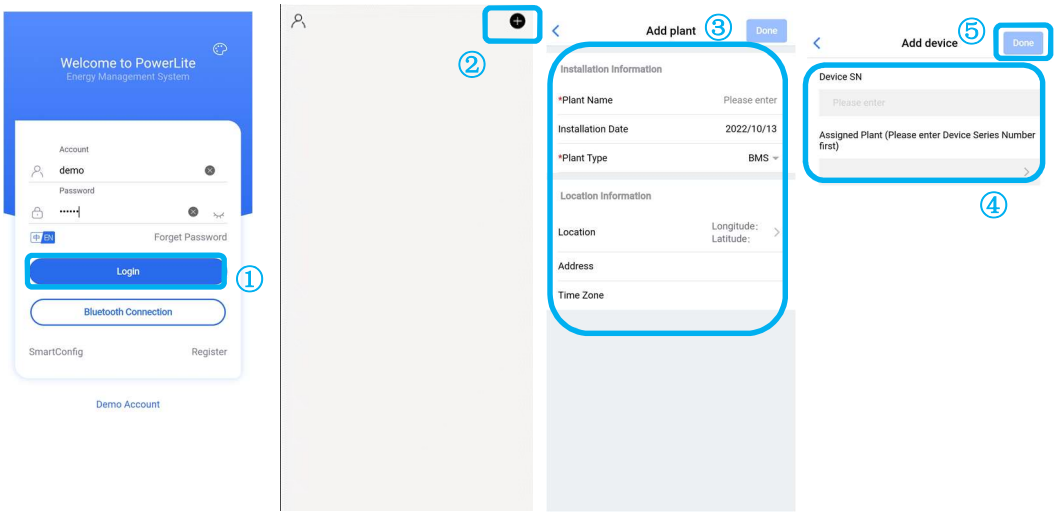

d. Select inverter manufacturer

After the site/device is added successfully, ①Click to enter the corresponding site, ②Click the Bluetooth SN code of the battery device to enter the battery interface, and you can view the device data, ③Click "Setting" to enter the inverter manufacturer interface for selecting the battery system configuration, ④Select After the inverter manufacturer is successfully set, the system configuration is completed.

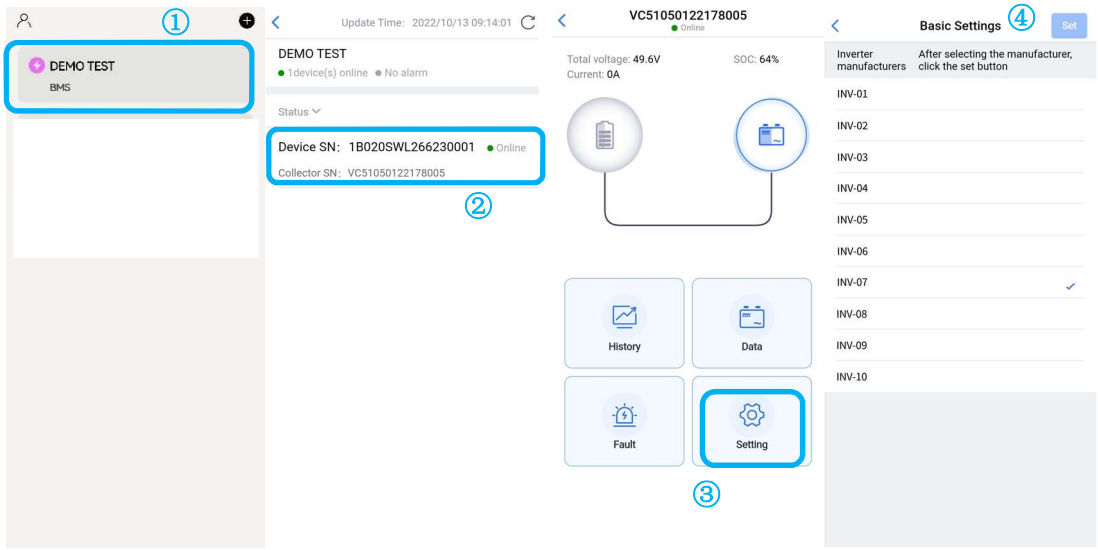

Please refer to the table below to set inverter manufacturer parameters.

Inverter manufactures	APP setting
Default	INV-01
Sacolar	INV-02
Goodwe	INV-03
Deye	INV-04
SMA	INV-05

Victron	INV-06
Haier	**INV-07**
Selectronic	INV-08
MEGAREVO	INV-09
LUXPOWER	INV-10

5 Maintenance and troubleshooting

5.1 Routine maintenance

- Maintenance charge every 6 months

From the date of manufacturer shipment, the battery shall be maintained every 6 months. Action must be taken in case SOC reaches 0% according to,

Ambient temperature	**Must be recharged within**
(45, 50] °C	7 days
(35, 45] °C	15 days
≤35°C	30 days

- Disconnect the battery if not being used

  BMS consumes power even when the battery is not being used. Disconnect the battery output to prevent the battery from becoming empty. For store-away, make sure the SOC is between 45% and 55% before disconnect.
- Check the battery system regularly. Contact your support if any anomaly detected.

5.2 Fault checklist

Fault	**Cause**	**Solution**
POWER button no response	Damaged POWER button Damaged cable or poor contact	Repair or replace the control module Please contact the supplier
Short discharge time	battery SOC is low	Keep the product charged continuously and keep the energy storage battery system fully charged
	low ambient temperature	Guarantee the product to work within the recommended suitable temperature range
	Product overload	Check load status and remove non-essential loads
	Batteries age and capacity decreases	To replace the battery, please contact the supplier for the battery and its components
Unable to charge and discharge	Internal failure	Log in to the PowerLite APP to view the fault information and contact the supplier
	Battery report charging or discharging protection failure	Log in to the PowerLite APP to view the fault information and contact the supplier
	After the battery is discharged to the SOC protection value, it needs to be charged for a period of time before it is allowed to discharge.	The battery is charged to the SOC value set by the restart

	battery over temperature	Stand at room temperature for more than 3 hours
After the system is powered on, the LED cannot be lit	LED failure	Please contact the supplier to repair or replace the control module
The LED cannot wake up during system operation	1. If the LED is off, the POWER button is faulty or the button wiring is loose 2. If the LED still does not light up after restarting, the LED is faulty	Please contact the supplier to repair or replace the control module
Abnormal battery communication	Communication disconnection	Check whether the battery stack is installed reliably.
The heater works abnormally	Heating circuit failure	Log in to the PowerLite APP to view the fault information and contact the supplier
Abnormal Bluetooth connection	bluetooth account connect error	Check whether the paired Bluetooth is consistent with the installed product
Abnormal WiFi connection	1. The WiFi connection is misconfigured 2. The WiFi module is abnormal and the line connection is abnormal	1. Check if the battery WiFi connection configuration is correct 2. Check whether the antenna is installed or connected reliably
The inverter is powered on for the first time through the battery, and the battery reports short-circuit protection	The parallel capacitor value of the input terminal on the battery side of the inverter is large	Battery protection can be automatically restored
Inverter won't start	The battery voltage is too low or the SOC is lower than the shutdown protection value	Charge the battery after starting the inverter from the grid

6 Warehouse storage guidelines

6.1 Packaging guidelines

Lithium-ion batteries is recognized as dangerous goods. The packaging requirements for battery products are as follows:

a. The packaging manufacturer with the packaging qualification for dangerous goods is responsible for providing product packaging, and the packaging manufacturer has a record in the local Commodity Inspection Bureau;

b. After the packaging manufacturer completes the packaging, the supplier needs to apply to the Commodity Inspection Bureau, and the Commodity Inspection Bureau will provide the "Dangerous Package Product Use Inspection Sheet" and

c. "Dangerous package product performance inspection sheet", and complete the dangerous package commodity inspection;

d. All battery packs should be packaged with product instruction manuals. The packaged product should be placed in a dry, dust-proof and moisture-proof packing box;

e. The product name, model, quantity, gross weight, manufacturer, and ex-factory date should be marked on the outside of the packing box.

f. The necessary signs such as "upward" and "fear of fire" shall meet the requirements of GB/T 191;

g. The packing method is: packing in a carton with molded foam buffer material in the carton;

h. Accessories packaging: single accessories are first fastened with cardboard or plastic film or braided straps, neatly placed in the carton, and filled with regular fillers (foam pads, cardboard, etc.) to prevent the accessories from shifting in the box. The following documents should be included with the product when leaving the factory:
   1) Product certificate (both in Chinese and English);
   2) Product use (installation) manual (both in Chinese and English);
   3) Product packing list (both in Chinese and English);
   4) Factory inspection report (both in Chinese and English).

i. Clean battery

j. Regular cleaning of the battery system is recommended. If the case is dirty, use a soft dry brush or dust collector to remove the dust. Cleaning liquid materials include solvents, abrasives, etc. Corrosive liquids should not be used to clean the housing.
   5) Packing

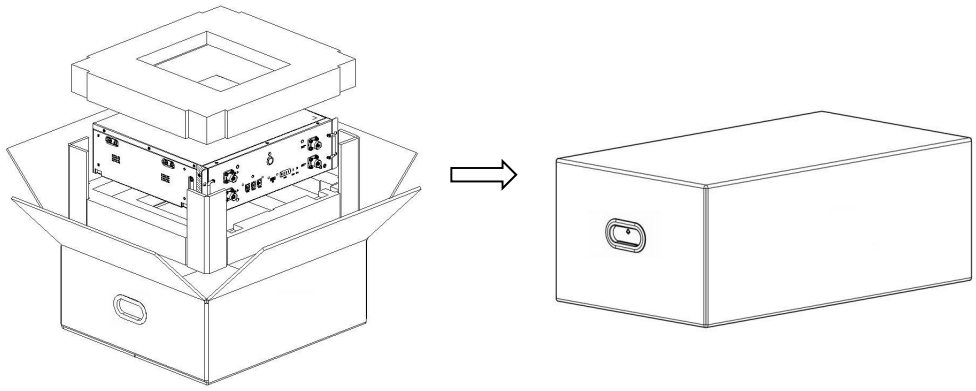

6.2 Storage

The battery pack is stored in a clean, dry and ventilated room with an ambient temperature of 25°C±5°C and a relative humidity of not more than 75%. The battery pack has a state of charge of 45% to 55%. Avoid contact with corrosive substances and keep away from fire and heat sources.

7 Dispose of used batteries

Comply with applicable local regulations for the disposal of electronic waste and used batteries.

- Do not mix with your household waste.
- Do not expose the battery to high temperatures or direct sunlight.
- Do not expose batteries to high humidity or corrosive environments.

Contact supplier or original manufacturer for disposal options.

8 Detailed parameter

Table 3.1 System parameter

Item	Parameter				Note
Model	B051100P02-H				
Cell type	LFP				
Rated voltage	51.2V				
Connection	1P16S				
Rated energy	5kWh				
Model	HLR-1X5K	HLR-1X10K	HLR-1X15K	HLR-1X20K	
Parallel No.	1	2	3	4	
Rated energy	5kWh	10kWh	15kWh	20kWh	
Rated charging and discharging current	50A	100A	150A	200A	
Maximum charging and discharging current	100A	180A	200A	200A	
Rated voltage	51.2V				
Working voltage range	44.8V~55.2V				
Communication	CAN/RS485/WiFi				
Protection function	Charging over voltage, discharging under voltage, over current, over temperature, short circuit protection				
Cycle life	6000 cycles (25℃, 0.5C/0.5C, 90%DOD, end of life 70%)				
Scalability	Maximum 4 module parallel for one cluster; Maximum 2 clusters parallel with junction box				
Enclosure rating	IP20				
Working ambient temperature	Charging: （-10,50）℃				
	Discharging: （-20,50）℃				
Working ambient humidity	10%~95%RH				
Working altitude	<2000m				Derating above 2000m
Certificate	IEC62619,CE,UL1973,FCC,CEI 0-21 listing				

Manufacturer: Qingdao Nahui Energy Technology Co., Ltd.
Adress：Room303, Entrance 1, No.4 Building, Lan Gu Entrepreneurship Center Phase 1, No. 7, Keji Yilu Road, Aoshanwei Sub district Office, Jimo District, Qingdao, Shandong
Web：www.nahui-newenergy.com/